UTLITY CARTS

Yeollin Sesang

Optional Accessories

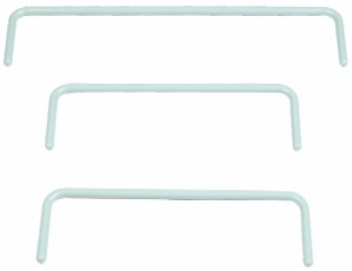

101,201 Guard Rail

Dimension 410x95(mm) 290x95(mm)

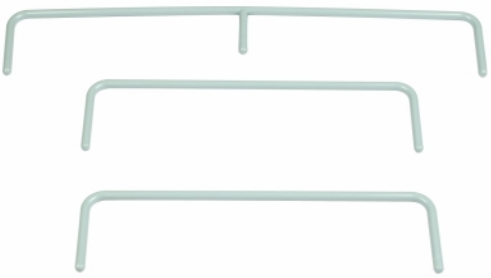

301 Guard Rail

Dimension 550x100(mm) 370x100(mm)

Fixed type

Dimension Φ40X130(mm)

3 Inch Caster / Brake

Dimension Φ3"X200(mm)

Urethane Caster/ Brake

Dimension Φ4"X230(mm)

YDS & MDS Caster / Brake

Dimension Φ4"X250(mm)

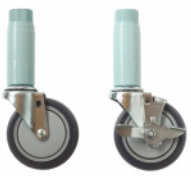

Low-noise Caster/ Brake

Dimension Φ4"X230(mm)

● Pole

220	Φ40X220(mm)	280	Φ40X280(mm)
270	Φ40X270(mm)	380	Φ40X380(mm)
		550	Φ40X550(mm)

Y-101Series

Dimension 360X90X70(mm)

Y-201Series

Dimension 420X80X70(mm)

Y-301Series

Dimension 470X90X70(mm)

● Handle

201 Series Drawer

Drawer Inner size 195X350X75H(mm)

101,301 Series Drawer

Drawer Inner size 260X350X100H(mm)

* **The brake caster is optional**

The real product may look different in color from the picture, and the design of a product can be changed without previous notice.

Optional Accessories

Y, YS, YDS Series

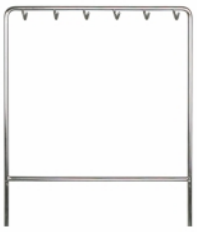

Utility Hanger (Y-101 & Y-201)

Dimension 410 X 540(mm)

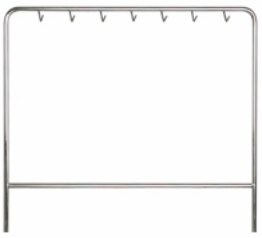

Utility Hanger (Y-301)

Dimension 550 X 540(mm)

IV-Stand

Dimension 300X650(mm)

Hanger

Dimension 310X650(mm)

● YM Shelf

Shelf size (LxD)
475X320 (mm)

● Y-101 Shelf

Shelf size (LxD)
560X385 (mm)

● Y-201 Shelf

Shelf size (LxD)
655X455 (mm)

● Y-301 Shelf

Shelf size (LxD)
815X490 (mm)

● YS- Shelf

Shelf size (LxD)
745X475 (mm)

Basket

Inner size(LxDxH) 375X120X130(mm)

Waste basket

Dimension Ø270(mm)

Box holder

Dimension 365X250X340H(mm)

Hamper

Dimension Ø370X585H(mm)

YDS Drawer

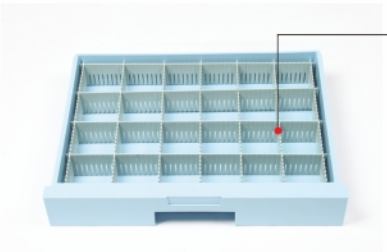

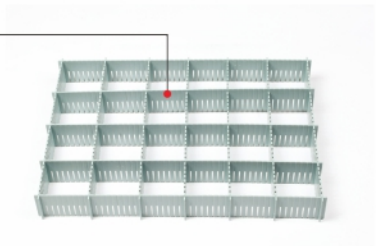

Divider

Dimension 510X360X60(mm)

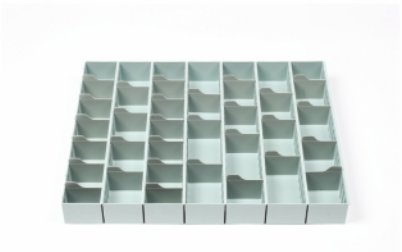

Multi-Case

Dimension 550X430X60(mm)

The real product may look different in color from the picture, and the design of a product can be changed without previous notice.

Mini cart

YM-101A

Dimension(LxDxH)	475X320X795(mm)
Shelf Inner size (LxD)	366X275(mm)
Between shelves	555(mm)
Max. Capacity	100kg
Material	ABS & PP
Caster	3 inch Rubber

YM-101C

Dimension(LxDxH)	475X320X1,120(mm)
Shelf Inner size (LxD)	366X275(mm)
Between shelves	275(mm)
Max. Capacity	100kg
Material	ABS & PP
Caster	3 inch Rubber

YM-101B

Dimension(LxDxH)	475X320X805(mm)
Shelf Inner size (LxD)	366X275(mm)
Between shelves	275(mm)
Max. Capacity	100kg
Material	ABS & PP
Caster	3 inch Rubber

YM-101D

Dimension(LxDxH)	475X320X505(mm)
Shelf Inner size (LxD)	366X275(mm)
Between shelves	275(mm)
Max. Capacity	100kg
Material	ABS & PP
Caster	3 inch Rubber

YM-101E

Dimension(LxDxH)	475X320X435(mm)
Shelf Inner size (LxD)	366X275(mm)
Between shelves	275(mm)
Max. Capacity	100kg
Material	ABS & PP

* **The brake caster is optional**

The real product may look different in color from the picture, and the design of a product can be changed without previous notice.

Y–Series(820mm)

Y-101A

Dimension(LxDxH)	560X385X820(mm)
Shelf Inner size (LxD)	440X340(mm)
Between shelves	555(mm)
Max. Capacity	100kg
Material	ABS & PP
Caster	4 inch Low-noise

Y-201A

Dimension(LxDxH)	655X455X820(mm)
Shelf Inner size (LxD)	525X400(mm)
Between shelves	555(mm)
Max. Capacity	100kg
Material	ABS & PP
Caster	4 inch Low-noise

Y-301A

Dimension(LxDxH)	815X490X820(mm)
Shelf Inner size (LxD)	680X440(mm)
Between shelves	555(mm)
Max. Capacity	100kg
Material	ABS & PP
Caster	4 inch Low-noise

Y–Series(830mm)

Y-101B

Dimension(LxDxH)	560X385X830(mm)
Shelf Inner size (LxD)	440X340(mm)
Between shelves	275(mm)
Max. Capacity	100kg
Material	ABS & PP
Caster	4 inch Low-noise

Y-201B

Dimension(LxDxH)	655X455X830(mm)
Shelf Inner size (LxD)	525X400(mm)
Between shelves	275(mm)
Max. Capacity	100kg
Material	ABS & PP
Caster	4 inch Low-noise

Y-301B

Dimension(LxDxH)	815X490X830(mm)
Shelf Inner size (LxD)	680X440(mm)
Between shelves	275(mm)
Max. Capacity	100kg
Material	ABS & PP
Caster	4 inch Low-noise

* **The brake caster is optional**

The real product may look different in color from the picture, and the design of a product can be changed without previous notice.

Y–Series (1030mm) High cart

Y-101BH

Dimension(LxDxH)	560X385X1030(mm)
Shelf Inner size (LxD)	440X340(mm)
Between shelves	375(mm)
Max. Capacity	100kg
Material	ABS & PP
Caster	4 inch Low-noise

Y-201BH

Dimension(LxDxH)	655X455X1030(mm)
Shelf Inner size (LxD)	525X400(mm)
Between shelves	375(mm)
Max. Capacity	100kg
Material	ABS & PP
Caster	4 inch Low-noise

Y-301BH

Dimension(LxDxH)	815X490X1030(mm)
Shelf Inner size (LxD)	680X440(mm)
Between shelves	375(mm)
Max. Capacity	100kg
Material	ABS & PP
Caster	4 inch Low-noise

Y–Series(820mm)

Y-101C

Dimension(LxDxH)	560X385X820(mm)
Shelf Inner size (LxD)	440X340(mm)
Between shelves	450(mm)
Drawer Inner size	260X355X100(mm)
Max. Capacity	100kg
Material	ABS & PP
Caster	4 inch Low-noise

Y-201C

Dimension(LxDxH)	655X455X820(mm)
Shelf Inner size (LxD)	525X400(mm)
Between shelves	475(mm)
Drawer Inner size	195X355X75(mm)
Max. Capacity	100kg
Material	ABS & PP
Caster	4 inch Low-noise

Y-301C

Dimension(LxDxH)	815X490X820(mm)
Shelf Inner size (LxD)	680X440(mm)
Between shelves	450(mm)
Drawer Inner size	260X355X100(mm)
Max. Capacity	100kg
Material	ABS & PP
Caster	4 inch Low-noise

* **The brake caster is optional**
The real product may look different in color from the picture, and the design of a product can be changed without previous notice.

Y–Series(830mm)

Y-101D

Dimension(LxDxH)	560X385X830(mm)
Shelf Inner size (LxD)	440X340(mm)
Between shelves	170 / 275(mm)
Drawer Inner size	260X355X100(mm)
Max. Capacity	100kg
Material	ABS & PP
Caster	4 inch Low-noise

Y-201D

Dimension(LxDxH)	655X455X830(mm)
Shelf Inner size (LxD)	525X400(mm)
Between shelves	195 / 275(mm)
Drawer Inner size	195X355X75(mm)
Max. Capacity	100kg
Material	ABS & PP
Caster	4 inch Low-noise

Y-301D

Dimension(LxDxH)	815X490X830(mm)
Shelf Inner size (LxD)	680X440(mm)
Between shelves	170 / 275(mm)
Drawer Inner size	260X355X100(mm)
Max. Capacity	100kg
Material	ABS & PP
Caster	4 inch Low-noise

Y–Series(1030mm) High cart

Y-101DH

Dimension(LxDxH)	560X385X1030(mm)
Shelf Inner size (LxD)	440X340(mm)
Between shelves	270 / 375(mm)
Drawer Inner size	260X355X100(mm)
Max. Capacity	100kg
Material	ABS & PP
Caster	4 inch Low-noise

Y-201DH

Dimension(LxDxH)	655X455X1030(mm)
Shelf Inner size (LxD)	525X400(mm)
Between shelves	295 / 375(mm)
Drawer Inner size	195X355X75(mm)
Max. Capacity	100kg
Material	ABS & PP
Caster	4 inch Low-noise

Y-301DH

Dimension(LxDxH)	815X490X1030(mm)
Shelf Inner size (LxD)	680X440(mm)
Between shelves	270 / 375(mm)
Drawer Inner size	260X355X100(mm)
Max. Capacity	100kg
Material	ABS & PP
Caster	4 inch Low-noise

* **The brake caster is optional**

The real product may look different in color from the picture, and the design of a product can be changed without previous notice.

Y–Series(820mm)

Y-101E

Dimension(LxDxH)	560X385X820(mm)
Shelf Inner size (LxD)	440X340(mm)
Between shelves	555(mm)
Max. Capacity	100kg
Material	ABS & PP
Caster	4 inch Low-noise

Y-201E

Dimension(LxDxH)	655X455X820(mm)
Shelf Inner size (LxD)	525X400(mm)
Between shelves	555(mm)
Max. Capacity	100kg
Material	ABS & PP
Caster	4 inch Low-noise

Y-301E

Dimension(LxDxH)	815X490X820(mm)
Shelf Inner size (LxD)	680X440(mm)
Between shelves	555(mm)
Max. Capacity	100kg
Material	ABS & PP
Caster	4 inch Low-noise

Y–Series(830mm)

Y-101F

Dimension(LxDxH)	560X385X830(mm)
Shelf Inner size (LxD)	440X340(mm)
Between shelves	275(mm)
Max. Capacity	100kg
Material	ABS & PP
Caster	4 inch Low-noise

Y-201F

Dimension(LxDxH)	655X455X830(mm)
Shelf Inner size (LxD)	525X400(mm)
Between shelves	275(mm)
Max. Capacity	100kg
Material	ABS & PP
Caster	4 inch Low-noise

Y-301F

Dimension(LxDxH)	815X490X830(mm)
Shelf Inner size (LxD)	680X440(mm)
Between shelves	275(mm)
Max. Capacity	100kg
Material	ABS & PP
Caster	4 inch Low-noise

* **The brake caster is optional**

The real product may look different in color from the picture, and the design of a product can be changed without previous notice.

Y–Series (1030mm) High cart

Y-101FH

Dimension(LxDxH)	560X385X1030(mm)
Shelf Inner size (LxD)	440X340(mm)
Between shelves	375(mm)
Max. Capacity	100kg
Material	ABS & PP
Caster	4 inch Low-noise

Y-201FH

Dimension(LxDxH)	655X455X1030(mm)
Shelf Inner size (LxD)	525X400(mm)
Between shelves	375(mm)
Max. Capacity	100kg
Material	ABS & PP
Caster	4 inch Low-noise

Y-301FH

Dimension(LxDxH)	815X490X1030(mm)
Shelf Inner size (LxD)	680X440(mm)
Between shelves	375(mm)
Max. Capacity	100kg
Material	ABS & PP
Caster	4 inch Low-noise

Y–Series(820mm)

Y-101G

Dimension(LxDxH)	560X385X820(mm)
Shelf Inner size (LxD)	440X340(mm)
Between shelves	450(mm)
Drawer Inner size	260X355X100(mm)
Max. Capacity	100kg
Material	ABS & PP
Caster	4 inch Low-noise

Y-201G

Dimension(LxDxH)	655X455X820(mm)
Shelf Inner size (LxD)	525X400(mm)
Between shelves	475(mm)
Drawer Inner size	195X355X75(mm)
Max. Capacity	100kg
Material	ABS & PP
Caster	4 inch Low-noise

Y-301G

Dimension(LxDxH)	815X490X820(mm)
Shelf Inner size (LxD)	680X440(mm)
Between shelves	450(mm)
Drawer Inner size	260X355X100(mm)
Max. Capacity	100kg
Material	ABS & PP
Caster	4 inch Low-noise

* **The brake caster is optional**

The real product may look different in color from the picture, and the design of a product can be changed without previous notice.

Y–Series(830mm)

Y-101H

Dimension(LxDxH)	560X385X830(mm)
Shelf Inner size (LxD)	440X340(mm)
Between shelves	170 / 275(mm)
Drawer Inner size	260X355X100(mm)
Max. Capacity	100kg
Material	ABS & PP
Caster	4 inch Low-noise

Y-201H

Dimension(LxDxH)	655X455X830(mm)
Shelf Inner size (LxD)	525X400(mm)
Between shelves	195 / 275(mm)
Drawer Inner size	195X355X75(mm)
Max. Capacity	100kg
Material	ABS & PP
Caster	4 inch Low-noise

Y-301H

Dimension(LxDxH)	815X490X830(mm)
Shelf Inner size (LxD)	680X440(mm)
Between shelves	170 / 275(mm)
Drawer Inner size	260X355X100(mm)
Max. Capacity	100kg
Material	ABS & PP
Caster	4 inch Low-noise

Y–Series (1030mm) High cart

Y-101HH

Dimension(LxDxH)	560X385X1030(mm)
Shelf Inner size (LxD)	440X340(mm)
Between shelves	270 / 375(mm)
Drawer Inner size	260X355X100(mm)
Max. Capacity	100kg
Material	ABS & PP
Caster	4 inch Low-noise

Y-201HH

Dimension(LxDxH)	655X455X1030(mm)
Shelf Inner size (LxD)	525X400(mm)
Between shelves	295 / 375(mm)
Drawer Inner size	195X355X75(mm)
Max. Capacity	100kg
Material	ABS & PP
Caster	4 inch Low-noise

Y-301HH

Dimension(LxDxH)	815X490X1030(mm)
Shelf Inner size (LxD)	680X440(mm)
Between shelves	270 / 375(mm)
Drawer Inner size	260X355X100(mm)
Max. Capacity	100kg
Material	ABS & PP
Caster	4 inch Low-noise

* **The brake caster is optional**
The real product may look different in color from the picture, and the design of a product can be changed without previous notice.

Y–Series(830mm)

Y-101J

Dimension(LxDxH)	560X385X830(mm)
Shelf Inner size (LxD)	440X340(mm)
Between shelves	170 / 275(mm)
Drawer Inner size	260X355X100(mm)
Max. Capacity	100kg
Material	ABS & PP
Caster	4 inch Low-noise

Y-201J

Dimension(LxDxH)	655X455X830(mm)
Shelf Inner size (LxD)	525X400(mm)
Between shelves	195 / 275(mm)
Drawer Inner size	195X355X75(mm)
Max. Capacity	100kg
Material	ABS & PP
Caster	4 inch Low-noise

Y-301J

Dimension(LxDxH)	815X490X830(mm)
Shelf Inner size (LxD)	680X440(mm)
Between shelves	170 / 275(mm)
Drawer Inner size	260X355X100(mm)
Max. Capacity	100kg
Material	ABS & PP
Caster	4 inch Low-noise

Y–Series (1030mm) High cart

Y-101JH

Dimension(LxDxH)	560X385X1030(mm)
Shelf Inner size (LxD)	440X340(mm)
Between shelves	270 /375(mm)
Drawer Inner size	260X355X100(mm)
Max. Capacity	100kg
Material	ABS & PP
Caster	4 inch Low-noise

Y-201JH

Dimension(LxDxH)	655X455X1030(mm)
Shelf Inner size (LxD)	525X400(mm)
Between shelves	295 / 375(mm)
Drawer Inner size	195X355X75(mm)
Max. Capacity	100kg
Material	ABS & PP
Caster	4 inch Low-noise

Y-301JH

Dimension(LxDxH)	815X490X1030(mm)
Shelf Inner size (LxD)	680X440(mm)
Between shelves	270 / 375(mm)
Drawer Inner size	260X355X100(mm)
Max. Capacity	100kg
Material	ABS & PP
Caster	4 inch Low-noise

* **The brake caster is optional**

The real product may look different in color from the picture, and the design of a product can be changed without previous notice.

Y–Series(830mm)

Y-101K

Dimension(LxDxH)	560X385X830(mm)
Shelf Inner size (LxD)	440X340(mm)
Between shelves	170 /170(mm)
Drawer Inner size	260X355X100(mm)
Max. Capacity	100kg
Material	ABS & PP
Caster	4 inch Low-noise

Y-201K

Dimension(LxDxH)	655X455X830(mm)
Shelf Inner size (LxD)	525X400(mm)
Between shelves	195 /195(mm)
Drawer Inner size	195X355X75(mm)
Max. Capacity	100kg
Material	ABS & PP
Caster	4 inch Low-noise

Y-301K

Dimension(LxDxH)	815X490X830(mm)
Shelf Inner size (LxD)	680X440(mm)
Between shelves	170 /170(mm)
Drawer Inner size	260X355X100(mm)
Max. Capacity	100kg
Material	ABS & PP
Caster	4 inch Low-noise

Y–Series (1030mm) High cart

Y-101KH

Dimension(LxDxH)	560X385X1030(mm)
Shelf Inner size (LxD)	440X340(mm)
Between shelves	270 /270(mm)
Drawer Inner size	260X355X100(mm)
Max. Capacity	100kg
Material	ABS & PP
Caster	4 inch Low-noise

Y-201KH

Dimension(LxDxH)	655X455X1030(mm)
Shelf Inner size (LxD)	525X400(mm)
Between shelves	295 /295(mm)
Drawer Inner size	195X355X75(mm)
Max. Capacity	100kg
Material	ABS & PP
Caster	4 inch Low-noise

Y-301KH

Dimension(LxDxH)	815X490X1030(mm)
Shelf Inner size (LxD)	680X440(mm)
Between shelves	270 /270(mm)
Drawer Inner size	260X355X100(mm)
Max. Capacity	100kg
Material	ABS & PP
Caster	4 inch Low-noise

* **The brake caster is optional**

The real product may look different in color from the picture, and the design of a product can be changed without previous notice.

Y–Series (930mm)

Y-401A

Dimension(LxDxH)	560X385X930(mm)
Shelf Inner size (LxD)	440X340(mm)
Between shelves	275 / 375(mm)
Max. Capacity	100kg
Material	ABS & PP
Caster	4 inch Low-noise

Y-501A

Dimension(LxDxH)	655X455X930(mm)
Shelf Inner size (LxD)	525X400(mm)
Between shelves	275 / 375(mm)
Max. Capacity	100kg
Material	ABS & PP
Caster	4 inch Low-noise

Y-601A

Dimension(LxDxH)	815X490X930(mm)
Shelf Inner size (LxD)	680X440(mm)
Between shelves	275 / 375(mm)
Max. Capacity	100kg
Material	ABS & PP
Caster	4 inch Low-noise

Y-401B

Dimension(LxDxH)	560X385X930(mm)
Shelf Inner size (LxD)	440X340(mm)
Between shelves	170 / 375(mm)
Drawer Inner size	260X355X100(mm)
Max. Capacity	100kg
Material	ABS & PP
Caster	4 inch Low-noise

Y-501B

Dimension(LxDxH)	655X455X930(mm)
Shelf Inner size (LxD)	525X400(mm)
Between shelves	195 / 375(mm)
Drawer Inner size	195X355X75(mm)
Max. Capacity	100kg
Material	ABS & PP
Caster	4 inch Low-noise

Y-601B

Dimension(LxDxH)	815X490X930(mm)
Shelf Inner size (LxD)	680X440(mm)
Between shelves	170 / 375(mm)
Drawer Inner size	260X355X100(mm)
Max. Capacity	100kg
Material	ABS & PP
Caster	4 inch Low-noise

* **The brake caster is optional**

The real product may look different in color from the picture, and the design of a product can be changed without previous notice.

Y–Series (930mm)

Y-401C

Dimension(LxDxH)	560X385X930(mm)
Shelf Inner size (LxD)	440X340(mm)
Between shelves	170 / 270(mm)
Drawer Inner size	260X355X100(mm)
Max. Capacity	100kg
Material	ABS & PP
Caster	4 inch Low-noise

Y-501C

Dimension(LxDxH)	655X455X930(mm)
Shelf Inner size (LxD)	525X400(mm)
Between shelves	195 / 295(mm)
Drawer Inner size	195X355X75(mm)
Max. Capacity	100kg
Material	ABS & PP
Caster	4 inch Low-noise

Y-601C

Dimension(LxDxH)	815X490X930(mm)
Shelf Inner size (LxD)	680X440(mm)
Between shelves	170 / 270(mm)
Drawer Inner size	260X355X100(mm)
Max. Capacity	100kg
Material	ABS & PP
Caster	4 inch Low-noise

Y-401D

Dimension(LxDxH)	560X385X930(mm)
Shelf Inner size (LxD)	440X340(mm)
Between shelves	170 / 375(mm)
Drawer Inner size	260X355X100(mm)
Max. Capacity	100kg
Material	ABS & PP
Caster	4 inch Low-noise

Y-501D

Dimension(LxDxH)	655X455X930(mm)
Shelf Inner size (LxD)	525X400(mm)
Between shelves	195 / 375(mm)
Drawer Inner size	195X355X75(mm)
Max. Capacity	100kg
Material	ABS & PP
Caster	4 inch Low-noise

Y-601D

Dimension(LxDxH)	815X490X930(mm)
Shelf Inner size (LxD)	680X440(mm)
Between shelves	170 / 375(mm)
Drawer Inner size	260X355X100(mm)
Max. Capacity	100kg
Material	ABS & PP
Caster	4 inch Low-noise

* **The brake caster is optional**

The real product may look different in color from the picture, and the design of a product can be changed without previous notice.

Y–Series (930mm)

Y-401E

Dimension(LxDxH)	560X385X930(mm)
Shelf Inner size (LxD)	440X340(mm)
Between shelves	170 / 270(mm)
Drawer Inner size	260X355X100(mm)
Max. Capacity	100kg
Material	ABS & PP
Caster	4 inch Low-noise

Y-501E

Dimension(LxDxH)	655X455X930(mm)
Shelf Inner size (LxD)	525X400(mm)
Between shelves	195 / 295(mm)
Drawer Inner size	195X355X75(mm)
Max. Capacity	100kg
Material	ABS & PP
Caster	4 inch Low-noise

Y-601E

Dimension(LxDxH)	815X490X930(mm)
Shelf Inner size (LxD)	680X440(mm)
Between shelves	170 / 270(mm)
Drawer Inner size	260X355X100(mm)
Max. Capacity	100kg
Material	ABS & PP
Caster	4 inch Low-noise

Y–Series (1040mm)

Y-701A

Dimension(LxDxH)	560X385X1,040(mm)
Shelf Inner size (LxD)	440X340(mm)
Between shelves	275(mm)
Max. Capacity	100kg
Material	ABS & PP

Y-701B

Dimension(LxDxH)	655X455X1,040(mm)
Shelf Inner size (LxD)	525X400(mm)
Between shelves	275(mm)
Max. Capacity	100kg
Material	ABS & PP

Y-701C

Dimension(LxDxH)	815X490X1,040(mm)
Shelf Inner size (LxD)	680X440(mm)
Between shelves	275(mm)
Max. Capacity	100kg
Material	ABS & PP

Y–Series (1120mm)

Y-801A

Dimension(LxDxH)	560X385X1,120(mm)
Shelf Inner size (LxD)	440X340(mm)
Between shelves	275(mm)
Max. Capacity	100kg
Material	ABS & PP
Caster	4 inch Low-noise

Y-801B

Dimension(LxDxH)	655X455X1,120(mm)
Shelf Inner size (LxD)	525X400(mm)
Between shelves	275(mm)
Max. Capacity	100kg
Material	ABS & PP
Caster	4 inch Low-noise

Y-801C

Dimension(LxDxH)	815X490X1,120(mm)
Shelf Inner size (LxD)	680X440(mm)
Between shelves	275(mm)
Max. Capacity	100kg
Material	ABS & PP
Caster	4 inch Low-noise

* **The brake caster is optional**

The real product may look different in color from the picture, and the design of a product can be changed without previous notice.

Y-Series (540mm)

Y-100

Dimension(LxDxH)	560X385X540(mm)
Shelf Inner size (LxD)	440X340(mm)
Between shelves	275(mm)
Max. Capacity	100kg
Material	ABS & PP
Caster	4 inch Low-noise

Y-200

Dimension(LxDxH)	655X455X540(mm)
Shelf Inner size (LxD)	525X400(mm)
Between shelves	275(mm)
Max. Capacity	100kg
Material	ABS & PP
Caster	4 inch Low-noise

Y-300

Dimension(LxDxH)	815X490X540(mm)
Shelf Inner size (LxD)	680X440(mm)
Between shelves	275(mm)
Max. Capacity	100kg
Material	ABS & PP
Caster	4 inch Low-noise

Y-Series (640mm)

Y-100H

Dimension(LxDxH)	560X385X640(mm)
Shelf Inner size (LxD)	440X340(mm)
Between shelves	375(mm)
Max. Capacity	100kg
Material	ABS & PP
Caster	4 inch Low-noise

Y-200H

Dimension(LxDxH)	655X455X640(mm)
Shelf Inner size (LxD)	525X400(mm)
Between shelves	375(mm)
Max. Capacity	100kg
Material	ABS & PP
Caster	4 inch Low-noise

Y-300H

Dimension(LxDxH)	815X490X640(mm)
Shelf Inner size (LxD)	680X440(mm)
Between shelves	375(mm)
Max. Capacity	100kg
Material	ABS & PP
Caster	4 inch Low-noise

Y-Series (440mm)

Y-100B

Dimension(LxDxH)	560X385X440(mm)
Shelf Inner size (LxD)	440X340(mm)
Between shelves	275(mm)
Max. Capacity	100kg
Material	ABS & PP

Y-200B

Dimension(LxDxH)	655X455X440(mm)
Shelf Inner size (LxD)	525X400(mm)
Between shelves	275(mm)
Max. Capacity	100kg
Material	ABS & PP

Y-300B

Dimension(LxDxH)	815X490X440(mm)
Shelf Inner size (LxD)	680X440(mm)
Between shelves	275(mm)
Max. Capacity	100kg
Material	ABS & PP

Y-Series (830mm)

YS-101A

Dimension(LxDxH)	745X475X830(mm)
Shelf Inner size (LxD)	550X430(mm)
Between shelves	555(mm)
Max. Capacity	120kg
Material	ABS
Caster	4 inch Low-noise

YS-101E

Dimension(LxDxH)	745X475X830(mm)
Shelf Inner size (LxD)	550X430(mm)
Between shelves	555(mm)
Max. Capacity	120kg
Material	ABS
Caster	4 inch Low-noise

* **The brake caster is optional**

The real product may look different in color from the picture, and the design of a product can be changed without previous notice.

YS–Series (840mm)

YS-101B

Dimension(LxDxH)	745X475X840(mm)
Shelf Inner size (LxD)	550X430(mm)
Between shelves	275(mm)
Max. Capacity	120kg
Material	ABS
Caster	4 inch Low-noise

YS-101B-BH

Dimension(LxDxH)	745X475X840(mm)
Shelf Inner size (LxD)	550X430(mm)
Between shelves	275(mm)
Max. Capacity	120kg
Material	ABS
Caster	4 inch Low-noise

YS-101F

Dimension(LxDxH)	745X475X840(mm)
Shelf Inner size (LxD)	550X430(mm)
Between shelves	275(mm)
Max. Capacity	120kg
Material	ABS
Caster	4 inch Low-noise

YS-101B-W

Dimension(LxDxH)	745X475X840(mm)
Shelf Inner size (LxD)	550X430(mm)
Between shelves	275(mm)
Max. Capacity	120kg
Material	ABS
Caster	4 inch Low-noise

YS-101B-C

Dimension(LxDxH)	745X475X840(mm)
Shelf Inner size (LxD)	550X430(mm)
Between shelves	275(mm)
Max. Capacity	120kg
Material	ABS
Caster	4 inch Low-noise

* **The brake caster is optional**

The real product may look different in color from the picture, and the design of a product can be changed without previous notice.

Y-3000Series(820mm)
Y-2000Series(820mm)

Model	Y-3000A	Y-2000A
Dimension(LxDxH)	810X500X820(mm)	750X455X820(mm)
Shelf Inner size (LxD)	680X460(mm)	610X430(mm)
Between shelves	555(mm)	
Max. Capacity	100kg	
Material	ABS & PP	
Caster	4 inch Low-noise	

Y-3000Series(880mm)
Y-2000Series(880mm)

Model	Y-3000A Handle	Y-2000A Handle
Dimension(LxDxH)	810X500X880(mm)	750X455X880(mm)
Shelf Inner size (LxD)	680X460(mm)	610X430(mm)
Between shelves	555(mm)	
Max. Capacity	100kg	
Material	ABS & PP	
Caster	4 inch Low-noise	

Y-3000Series(830mm)
Y-2000Series(830mm)

Model	Y-3000B	Y-2000B
Dimension(LxDxH)	810X500X830(mm)	750X455X830(mm)
Shelf Inner size (LxD)	680X460(mm)	610X430(mm)
Between shelves	272(mm)	
Max. Capacity	100kg	
Material	ABS & PP	
Caster	4 inch Low-noise	

Y-3000Series(890mm)
Y-2000Series(890mm)

Model	Y-3000B Handle	Y-2000B Handle
Dimension(LxDxH)	810X500X890(mm)	750X455X890(mm)
Shelf Inner size (LxD)	680X460(mm)	610X430(mm)
Between shelves	272(mm)	
Max. Capacity	100kg	
Material	ABS & PP	
Caster	4 inch Low-noise	

* **The brake caster is optional**

The real product may look different in color from the picture, and the design of a product can be changed without previous notice.

Meal delivery cart

You can make the tiers as you want.

Y–2015

Dimension (L x D x H)750X455X1490mm

Y–3015

Dimension (L x D x H)810X500X1460mm

Example

You can put various trays on each shelf that meets the shelf inner size.

Y–2020

Dimension (L x D x H)750X455X1530mm

Y–3020

Dimension (L x D x H)810X500X1510mm

Parts list that you can choose

parts name	Size	Product picture
Cap		
Y-2000	Outer size (750mmX455mm) Inner size (610mmX430mm)	
Y-3000	Outer size (810mmX500mm) Inner size (680mmX460mm)	

Parts list that you can choose

parts name	Size	Product picture
Pole	220mm	
Pole	270mm	
4-inch Urethane Casters		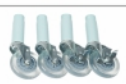
Fixed type		

The real product may look different in color from the picture, and the design of a product can be changed without previous notice.

ET-50 (Equipment Trolley) (New Product)

- Load Weight : 25Kg
- Material : ABS + Aluminium

Optional Accessories

Basket

Inner Size 273(L) X 126(W) X 90(H)mm

Basket

The real product may look different in color from the picture, and the design of a product can be changed without previous notice.

ET-100 (Equipment Trolley) (New Product)

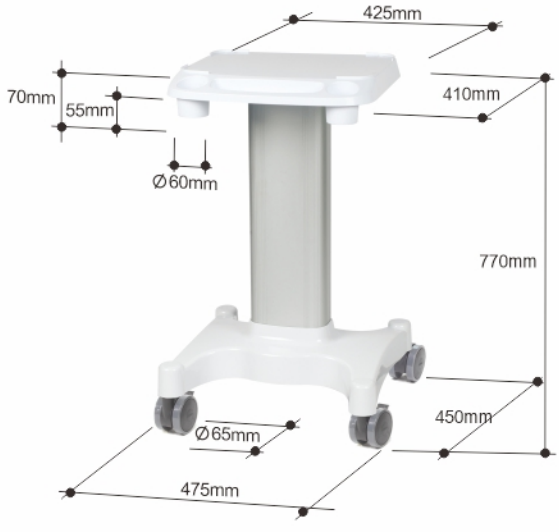

- Load Weight : 25Kg
- Material : ABS + Aluminium

Optional Accessories

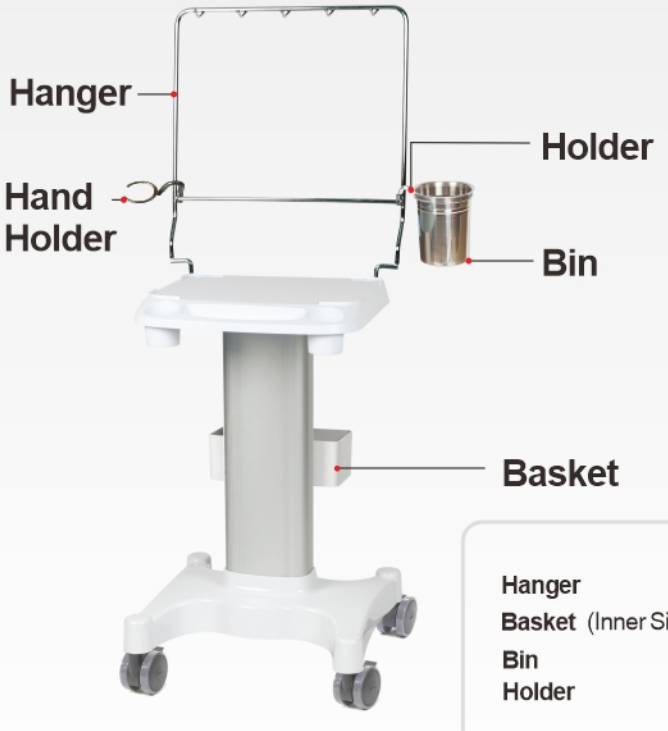

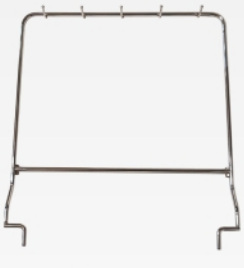

Hanger

Holder

Basket

Bin

Hand Holder

Hanger	405(L) X 450(H)mm
Basket (Inner Size)	273(L) X 126(W) X 90(H)mm
Bin	Ø119 / Ø 95 X 139(H)mm
Holder	Ø113mm

Hand Holder

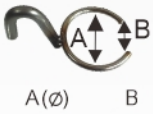

A (Ø)	B
50mm	27mm
28mm	17mm

The real product may look different in color from the picture, and the design of a product can be changed without previous notice.

ET-200 (Equipment Trolley) (New Product)

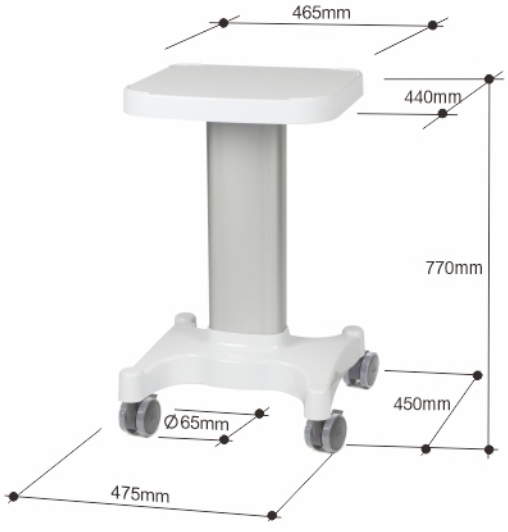

- Load Weight : 25Kg
- Material : ABS + Aluminium

Optional Accessories

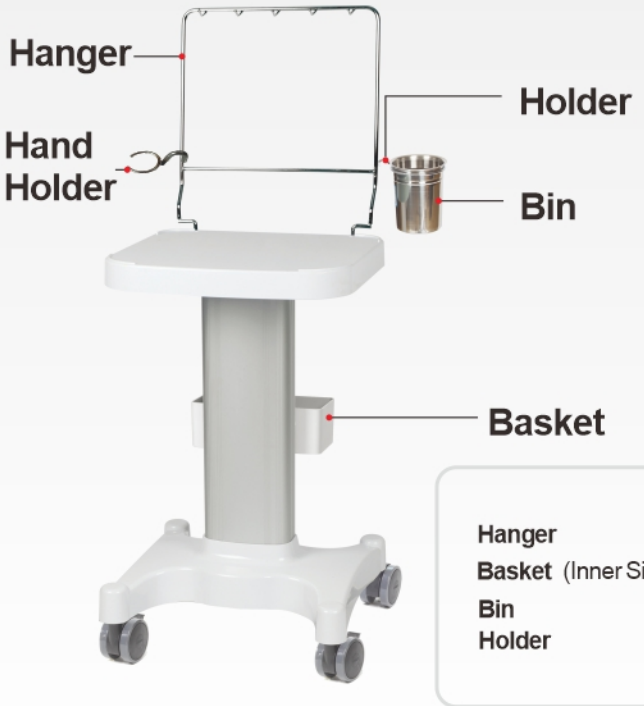

Hanger

Holder

Basket

Bin

Hand Holder

Hanger	405(L) X 450(H)mm
Basket (Inner Size)	273(L) X 126(W) X 90(H)mm
Bin	Ø119 / Ø 95 X 139(H)mm
Holder	Ø113mm

Hand Holder

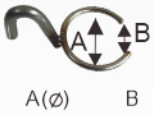

A(Ø)	B
50mm	27mm
28mm	17mm

The real product may look different in color from the picture, and the design of a product can be changed without previous notice.

MDS-Series

MDS-103

Dimension(LxDxH)	640 X 480 X 850(mm)
Shelf Inner size (LxD)	440 X 430(mm)
Drawer Inner size	395 X 435 X170(mm)
Max. Capacity	120kg
Material	ABS
4 inch Casters (2 Brake)	

MDS-104

Dimension(LxDxH)	640 X 480 X 850(mm)
Shelf Inner size (LxD)	440 X 430(mm)
Drawer Inner size	395 X 435 X 82 / 170(mm)
Max. Capacity	120kg
Material	ABS
4 inch Casters (2 Brake)	

MDS-105

Dimension(LxDxH)	640 X 480 X 850(mm)
Shelf Inner size (LxD)	440 X 430(mm)
Drawer Inner size	395 X 435 X 82 / 170(mm)
Max. Capacity	120kg
Material	ABS
4 inch Casters (2 Brake)	

MDS-106

Dimension(LxDxH)	640 X 480 X 850(mm)
Shelf Inner size (LxD)	440 X 430(mm)
Drawer Inner size	395 X 435 X 82(mm)
Max. Capacity	120kg
Material	ABS
4 inch Casters (2 Brake)	

MDS-106(B)

Dimension(LxDxH)	640 X 480 X 850(mm)
Shelf Inner size (LxD)	440 X 430(mm)
Drawer Inner size	395 X 435 X 82(mm)
Max. Capacity	120kg
Material	ABS
4 inch Casters (2 Brake)	

MDS-104(B)

Dimension(LxDxH)	640 X 480 X 850(mm)
Shelf Inner size (LxD)	440 X 430(mm)
Drawer Inner size	395 X 435 X 82 / 170(mm)
Max. Capacity	120kg
Material	ABS
4 inch Casters (2 Brake)	

The real product may look different in color from the picture, and the design of a product can be changed without previous notice.

Crash Cart

Optional Accessories

Oxygen tank holder

Dimension	ϕ113 X 583(mm)
Material	Stainless

IV Pole

Dimension	ϕ15X1,210(mm)
Material	ABS / Stainless

Monitor stand

Dimension	393(L) X 277(D)(mm)
Material	steel

Waste box stand

Dimension	382(L) X 169(D)(mm)
Material	steel

Tumbler holder

Dimension	ϕ113(mm)
Material	Stainless

The above optional accessories can be applied to all YDS models
* The oxygen tank, waste box and tumbler are just for demonstration of optional accessories' use'

The real product may look different in color from the picture, and the design of a product can be changed without previous notice.

YDS-Series (with lock)

YDS-301 (with lock)

Dimension(LxDxH)	745X475X900(mm)
Shelf Inner size (LxD)	550X430(mm)
Drawer Inner size	510X360X82/160(mm)
Max. Capacity	120kg
Material	ABS
4 inch Casters (2 Brake)	

YDS-302 (with lock)

Dimension(LxDxH)	745X475X900(mm)
Shelf Inner size (LxD)	550X430(mm)
Drawer Inner size	510X360X82/160(mm)
Max. Capacity	120kg
Material	ABS
4 inch Casters (2 Brake)	

YDS-303 (with lock)

Dimension(LxDxH)	745X475X900(mm)
Shelf Inner size (LxD)	550X430(mm)
Drawer Inner size	510X360X82/160(mm)
Max. Capacity	120kg
Material	ABS
4 inch Casters (2 Brake)	

YDS-201 (with lock)

Dimension(LxDxH)	745X475X900(mm)
Shelf Inner size (LxD)	550X430(mm)
Drawer Inner size	510X360X160(mm)
Max. Capacity	120kg
Material	ABS
4 inch Casters (2 Brake)	

YDS-202 (with lock)

Dimension(LxDxH)	745X475X900(mm)
Shelf Inner size (LxD)	550X430(mm)
Drawer Inner size	510X360X160(mm)
Max. Capacity	120kg
Material	ABS
4 inch Casters (2 Brake)	

YDS-203 (with lock)

Dimension(LxDxH)	745X475X900(mm)
Shelf Inner size (LxD)	550X430(mm)
Drawer Inner size	510X360X160(mm)
Max. Capacity	120kg
Material	ABS
4 inch Casters (2 Brake)	

The real product may look different in color from the picture, and the design of a product can be changed without previous notice.

YDS-Series (with lock)

YDS-204 (with lock)

Dimension(LxDxH)	745X475X900(mm)
Shelf Inner size (LxD)	550X430(mm)
Drawer Inner size	510X360X82/160(mm)
Max. Capacity	120kg
Material	ABS
4 inch Casters (2 Brake)	

YDS-205 (with lock)

Dimension(LxDxH)	745X475X900(mm)
Shelf Inner size (LxD)	550X430(mm)
Drawer Inner size	510X360X82/160(mm)
Max. Capacity	120kg
Material	ABS
4 inch Casters (2 Brake)	

YDS-102 (with lock)

Dimension(LxDxH)	745X475X900(mm)
Shelf Inner size (LxD)	550X430(mm)
Drawer Inner size	510X360X82(mm)
Max. Capacity	120kg
Material	ABS
4 inch Casters (2 Brake)	

YDS-103 (with lock)

Dimension(LxDxH)	745X475X900(mm)
Shelf Inner size (LxD)	550X430(mm)
Drawer Inner size	510X360X82(mm)
Max. Capacity	120kg
Material	ABS
4 inch Casters (2 Brake)	

YDS-106 (with lock)

Dimension(LxDxH)	745X475X900(mm)
Shelf Inner size (LxD)	550X430(mm)
Drawer Inner size	510X360X82(mm)
Max. Capacity	120kg
Material	ABS
4 inch Casters (2 Brake)	

YDS-106L (with lock)

Dimension(LxDxH)	745X475X900mm)
Shelf Inner size (LxD)	550X430(mm)
Drawer Inner size	510X360X82(mm)
Max. Capacity	120kg
Material	ABS
4 inch Casters (2 Brake)	

The real product may look different in color from the picture, and the design of a product can be changed without previous notice.

YDS-Series

YDS-201

Dimension(LxDxH)	745X475X900(mm)
Shelf Inner size (LxD)	550X430(mm)
Drawer Inner size	510X360X160(mm)
Max. Capacity	120kg
Material	ABS
4 inch Casters (2 Brake)	

YDS-202

Dimension(LxDxH)	745X475X900(mm)
Shelf Inner size (LxD)	550X430(mm)
Drawer Inner size	510X360X160(mm)
Max. Capacity	120kg
Material	ABS
4 inch Casters (2 Brake)	

YDS-203

Dimension(LxDxH)	745X475X900(mm)
Shelf Inner size (LxD)	550X430(mm)
Drawer Inner size	510X360X160(mm)
Max. Capacity	120kg
Material	ABS
4 inch Casters (2 Brake)	

YDS-204

Dimension(LxDxH)	745X475X900(mm)
Shelf Inner size (LxD)	550X430(mm)
Drawer Inner size	510X360X82/160(mm)
Max. Capacity	120kg
Material	ABS
4 inch Casters (2 Brake)	

YDS-205

Dimension(LxDxH)	745X475X900(mm)
Shelf Inner size (LxD)	550X430(mm)
Drawer Inner size	510X360X82/160(mm)
Max. Capacity	120kg
Material	ABS
4 inch Casters (2 Brake)	

■ Divider

The real product may look different in color from the picture, and the design of a product can be changed without previous notice.

YDS-Series

YDS-301

Dimension(LxDxH)	745X475X900(mm)
Shelf Inner size (LxD)	550X430(mm)
Drawer Inner size	510X360X82/160(mm)
Max. Capacity	120kg
Material	ABS
4 inch Casters (2 Brake)	

YDS-302

Dimension(LxDxH)	745X475X900(mm)
Shelf Inner size (LxD)	550X430(mm)
Drawer Inner size	510X360X82/160(mm)
Max. Capacity	120kg
Material	ABS
4 inch Casters (2 Brake)	

YDS-303

Dimension(LxDxH)	745X475X900(mm)
Shelf Inner size (LxD)	550X430(mm)
Drawer Inner size	510X360X82/160(mm)
Max. Capacity	120kg
Material	ABS
4 inch Casters (2 Brake)	

YDS-106

Dimension(LxDxH)	745X475X900(mm)
Shelf Inner size (LxD)	550X430(mm)
Drawer Inner size	510X360X82(mm)
Max. Capacity	120kg
Material	ABS
4 inch Casters (2 Brake)	

YDS-102

Dimension(LxDxH)	745X475X900(mm)
Shelf Inner size (LxD)	550X430(mm)
Drawer Inner size	510X360X82(mm)
Max. Capacity	120kg
Material	ABS
4 inch Casters (2 Brake)	

YDS-106L

Dimension(LxDxH)	745X475X900(mm)
Shelf Inner size (LxD)	550X430(mm)
Drawer Inner size	510X360X82(mm)
Max. Capacity	120kg
Material	ABS
4 inch Casters (2 Brake)	

The real product may look different in color from the picture, and the design of a product can be changed without previous notice.

Medical Cart

Model ENDO-300

Dimension

(W X D X H)(mm) 400/480/520 X 550 X 1,250

Specification

1. Wheel : 5" (Rubber)
2. Material : Steel / Aluminum / Plastic
3. Outlet : 220V X 6 / 220V X 4 / 110V X 6
4. Keyboard : Arm / Slide (Optional)
5. Others : LCD Arm (Optional)
   Endoscope hanger (Optional)
   Water bucket hanger
   Grey / Skyblue

Model LAPA-300

Dimension

(W X D X H)(mm) 480 X 550 X 1,350

Specification

1. Wheel : 5" (Rubber)
2. Material : Steel / Aluminum / Plastic
3. Outlet : 220V X 6 / 220V X 4 / 110V X 6
4. Keyboard : Arm / Slide (Optional)
5. Others : LCD Arm (Optional)
   I.V Hanger (Optional)
   Gas can prop (Optional)

Model ENT-350

Dimension

(W X D X H)(mm) 480 X 545 X 1,090

Specification

1. Wheel : 5" (Rubber)
2. Material : Steel / Aluminum / Plastic
3. Outlet : 220V X 6 / 220V X 4 / 110V X 6
4. Keyboard : Arm / Slide (Optional)
5. Others : LCD Arm (Optional)
   Acryl Hanger (Optional)

Model 350 (2-Shelves)

Dimension

(W X D X H)(mm) 440 X 463 X 770

Specification

1. Wheel : 5" (Rubber)
2. Material : Steel / Aluminum / Plastic
3. Others : LCD Arm
   Hanger
   Drawer
   Basket
   Keyboard case
   Color
   Hole size
   Optional / Adjustable

Model PC-350-B

Dimension

(W X D X H)(mm) 520 X 550 X 800

Specification

1. Wheel : 5" (Rubber)
2. Material : Steel / Aluminum / Plastic
3. Outlet : 220V X 6 / 220V X 4 / 110V X 6
4. Keyboard : Arm / Slide (Optional)
5. Others : LCD Arm (Optional)
   Middle shelf (Optional)
   Drawer (Optional)

Model BOVI-B

Dimension

(W X D X H)(mm) 400 X 500 X 840

Specification

1. Wheel : 4" (Urethane)
2. Material : Steel / Aluminum / Plastic
3. Others : Drawer (Optionial)
   Company Logo (Possible)

The real product may look different in color from the picture, and the design of a product can be changed without previous notice.

Dressing Cart / Treatment Cart

Dressing Cart

Model	Dimension
CY 401S	650X450X900(mm)
CY 401M	750X450X900(mm)
CY 401L	950X450X900(mm)

Dressing Cart

Model	Dimension
CY 4014	650X450X900(mm)
CY 4015	950X450X900(mm)

Dressing Cart

Model	Dimension
CY 4223	650X450X900(mm)
CY 4224	750X450X900(mm)
CY 4225	950X450X900(mm)

Treatment Cart

Model	Dimension
CY 421S	550X450X900(mm)
CY 421M	650X450X900(mm)
CY 421L	750X450X900(mm)

Treatment Cart

Model	Dimension
CY 42HS	550X450X950(mm)
CY 42HM	650X450X950(mm)
CY 42HL	750X450X950(mm)

Dressing Cart

Model	Dimension
CY 4221	750X450X950(mm)
CY 4222	950X450X950(mm)

Treatment Cart

Model	Dimension
CY 4216	650X450X900(mm)

Treatment Cart

Model	Dimension
CY 423S	550X450X950(mm)
CY 423M	650X450X950(mm)
CY 423L	750X450X950(mm)

Treatment Cart

Model	Dimension
CY 4215	750X450X900(mm)

The real product may look different in color from the picture, and the design of a product can be changed without previous notice.

Infrared Irradiator (IR-2014)

SPECIFICATIONS

- Model : IR-2014
- Voltage : AC220V, 50~60Hz
- Power Consumption : 240W
- Timer : 0~60Min
- Size : 600mmX1,700mm
- Weight : 6.9Kg

FEATURES

- Simple design.
- Easy adjustment of the height.
- Convenient irradiation with the handle.
- Convenient movement.

The real product may look different in color from the picture, and the design of a product can be changed without previous notice.

Yeollin Sesang

18-4, Goraesan-ro 99beon-gil, Wabu-eup,
Namyangju-si, Gyeonggi-do, Korea
Tel : 82-2-464-6838 Fax : 82-2-467-6837
E-mail:cart@ysesang.com
http://www.ysesang.com

24-01